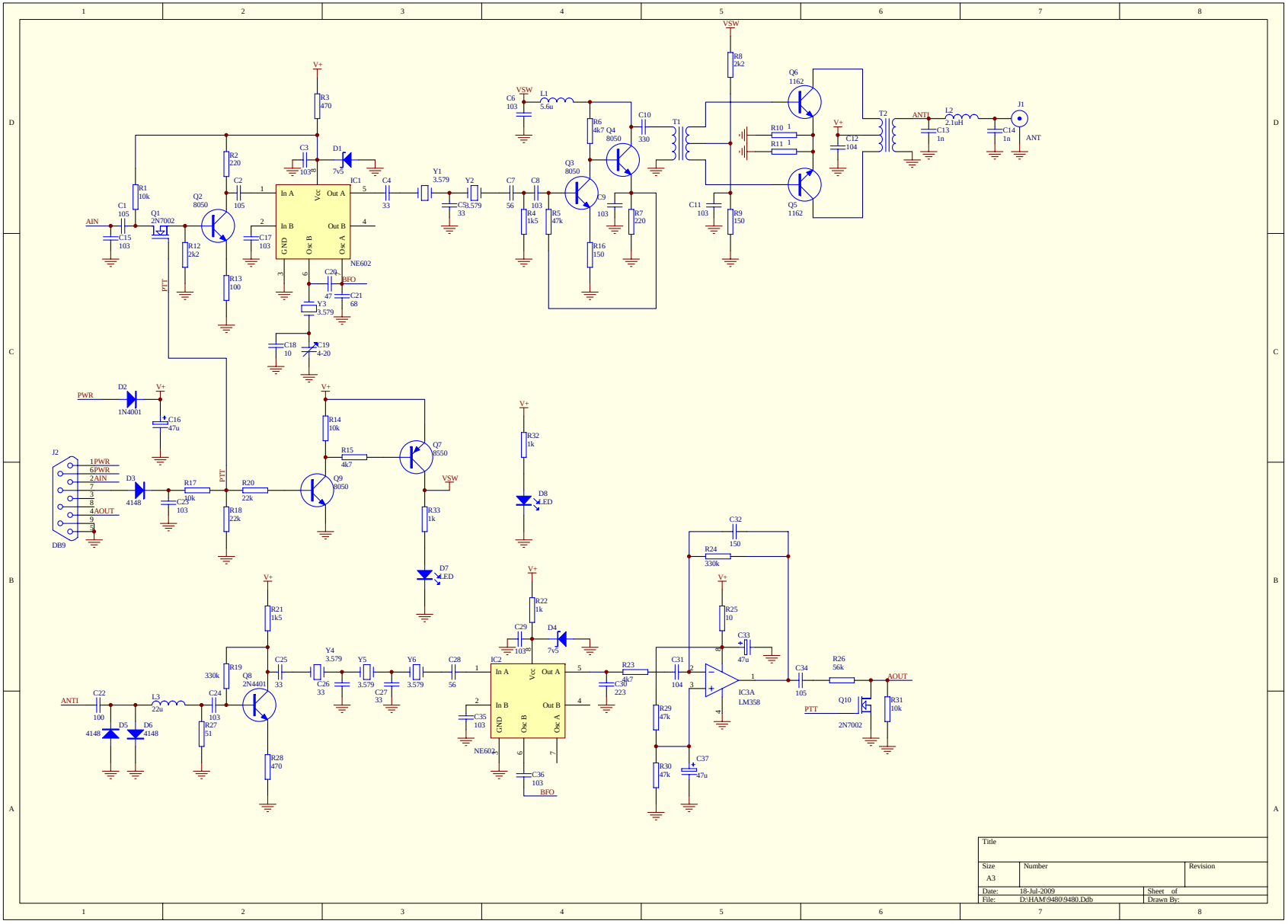
VSW
V+
R8 2k2
Q6 1162
Q5 1162
R10 1
R11 1
C12 104
T2
ANTI
L2 2.1uH
C13 1n
C14 1n
J1
ANT
C6 103
L1 5.6u
C10 330
T1
C11 103
R9 150
R3 470
D1 7V5
C3 103
IC1
NE602
In A
Out A
Vcc
In B
Out B
GND
Osc B
Osc A
C4 33
Y1 3.579
Y2 3.579
C7 56
C8 103
R6 4k7
Q4 8050
Q3 8050
C9 103
R7 220
R16 150
R4 1k5
R5 47k
C1 105
R1 10k
Q2 8050
R2 220
C2 105
C15 103
AIN
Q1 2N7002
R12 2k2
R13 100
C17 103
PTT
C20 47
BFO
C21 68
Y3 3.579
C18 10
C19 4-20
PWR
D2 1N4001
C16 47u
J2
DB9
1PWR
6PWR
2AIN
4AOUT
D3 4148
R17 10k
C23 103
R20 22k
R18 22k
R14 10k
R15 4k7
Q7 8550
Q9 8050
R33 1k
D7 LED
R32 1k
D8 LED
C32 150
R24 330k
R25 10
C33 47u
R22 1k
D4 7V5
C29 103
IC2
C28 56
R23 4k7
C30 223
C31 104
IC3A LM358
C34 105
R26 56k
AOUT
Q10 2N7002
R31 10k
R29 47k
R30 47k
C37 47u
C35 103
C36 103
R21 1k5
Q8 2N4401
R19 330k
C25 33
Y4 3.579
Y5 3.579
Y6 3.579
C26 33
C27 33
C22 100
L3 22u
C24 103
R27 51
D5 4148
D6 4148
R28 470
Title
Size A3
Number
Revision
Date: 18-Jul-2009
Sheet of
File: D:HAM9480.9480.Ddb
Drawn By: